ICE-Tray

A Laptop-Sized DSP Platform
Featuring a 6-Core Xeon and 64GB of Memory

The ICE-Tray provides the processing you need *all in a single enclosure*. In a laptop-sized platform, the ICE-Tray is the newest generation of ICE solutions for your portable signal processing needs.

The ICE-Tray is designed to take full advantage of ICE DSP signal input and output modules with 1GHz bandwidth or dual 500 MHz bandwidth and dual FPGA processor modules hardware with gate array capabilities enabling real-time processing.

The ICE-Tray is a logical outgrowth of the popular ICE *superPAC* with the addition of a 6-Core Xeon® CPU for more processing power and an added PCIe 8-Lane expansion slot allowing for a second ICEPIC8S card to be installed.

Users can configure the ICE-Tray with up to 4 single site or 2 Dual Site modules or a combination depending on your signal processing needs. Two UltraScale™ K8M FPGAs or the two of the new UltraScale+™ K8P FPGA processor modules can be installed and have direct access to two QSFP+ sockets. Selection of internal or external multi-terabyte high-speed storage capability is also available. Gigabit Ethernet control and three USB 3.1 connections are provided.

Features

- Embedded ICEPIC8L Architecture with I/O Modules and Dual Processor Module Support
- Embedded Intel® 6-Core Xeon® 2.7GHz Processor with 64GB of RAM
- Full stand-alone capability in a 1.75” thin, small aluminum enclosure.
- 1GbE Network Control Port
- USB 3.1 x3 / USB 2.0 x2 / HDMI 4K2K video
- Flexible I/O site communications to crossbar and processor modules for fast DSP data flow
- M.2 solid-state operating system drive and/or High-Speed USB 3 Boot
- Intel® High Endurance Technology Internal Dual U.2 formfactor 7.68TB NVMe Storage (Uses Short PCIe Slot)
- External Storage Options using OCulink/USB3/GbE
- 2nd ICEPIC Card (PIC8Short) | 2 Single Site or 1 Dual Site module | Optional GPU GTX-1030 384 Core 2GB Memory
- Dimensions 15.25” x 11.75” x 1.75”
- 50W – 160W on 12V DC. Power consumption is application and I/O module dependent
- 6-PIN Molex Power 12V DC with Medical Grade Supply
- Support for data multicast formats (ICE Packets, VITA.49, SDDS, custom.)
- Dual QSFP+ Ports Direct from FPGA Processor modules 1 and 2 for custom High Date Rate applications
- Integrated over-temperature protection
- Integrated over/under-voltage protection
- Software configurable to support a variety of data reduction, up/down conversions, and real-time processing
- DSP Gate array applications on 2 available ICE-K8M Xilinx UltraScale™ processor modules
- DSP Gate array applications on 2 available ICE-K8P Xilinx UltraScale+™ processor modules

Note: Laptop Not Included

© 2021 ICE Enterprises, Inc. ◆ 10302 Eaton Place, Suite 100, Fairfax, VA 22030
Phone 703-934-4879 ◆ Fax 703-591-3048 ◆ Info@ice-online.com ◆ www.ice-online.com

Physical Layout and Data Path bandwidths

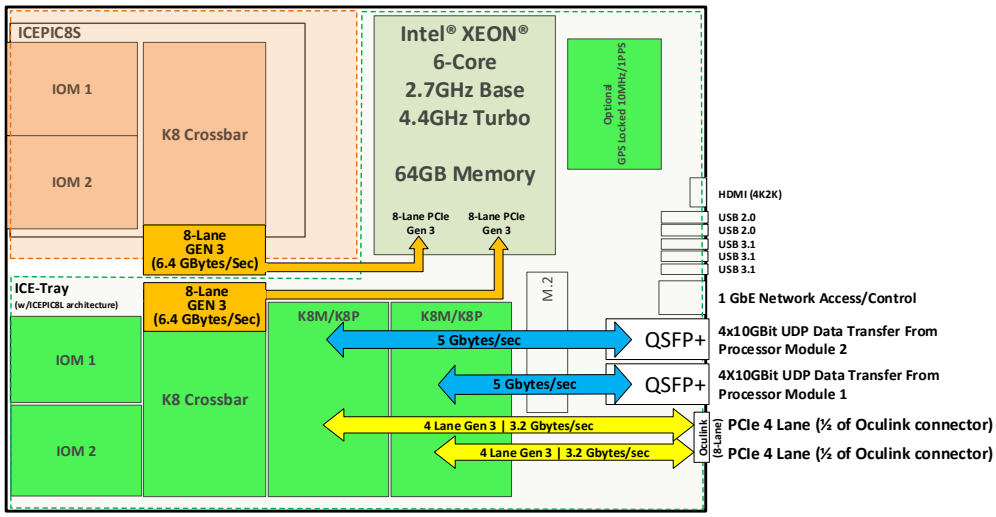

Applications

- Wide Band RF, Analog, Optical, and Network processing
- Wideband Analog 1GHz (or Simultaneous Dual 500MHz) bandwidth signal input
- Optical and Network processing IO Modules available
- Wideband Analog Dual 500MHz bandwidth Output signal generation
- Optical-to-Network conversion (packetized data multicast or OTN/SONET)
- Network-to-Network processing (packet ingest⇨filter⇨analyze⇨modify⇨broadcast)
- Cyber Security Interfaces
- Base station infrastructure
- Customer Sandbox or Custom Real-time FPGA processing of in/outbound data streams
- High-speed capture, digital tuning, demodulation, and multicast data reduction/distribution
- Instrumentation, Test and Measurement

External Portable Storage

Optional External Storage with the ICE *flightPAC30.* Dimensions are 5.75” x 1.625” x 8” (Physically the size of a DVD/CDROM)

- 15|30 TB Solid State Storage Options
- 2-Drive Write Speed from 8 PCIe lanes
- Many custom storage options are available Contact ICE

Internal Removable Storage

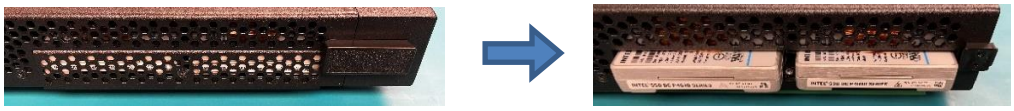

- Up to Dual U.2 Formfactor, 7.68 TB Solid State Storage Options
- 2-Drive Write Speed from dual 4-Lane PCIe slot (Uses available Short 8-Lane PCIe slot)

© 2021 ICE Enterprises, Inc. ◆ 10302 Eaton Place, Suite 100, Fairfax, VA 22030
Phone 703-934-4879 ◆ Fax 703-591-3048 ◆ Info@ice-online.com ◆ www.ice-online.com

ICE-Tray Example Configurations

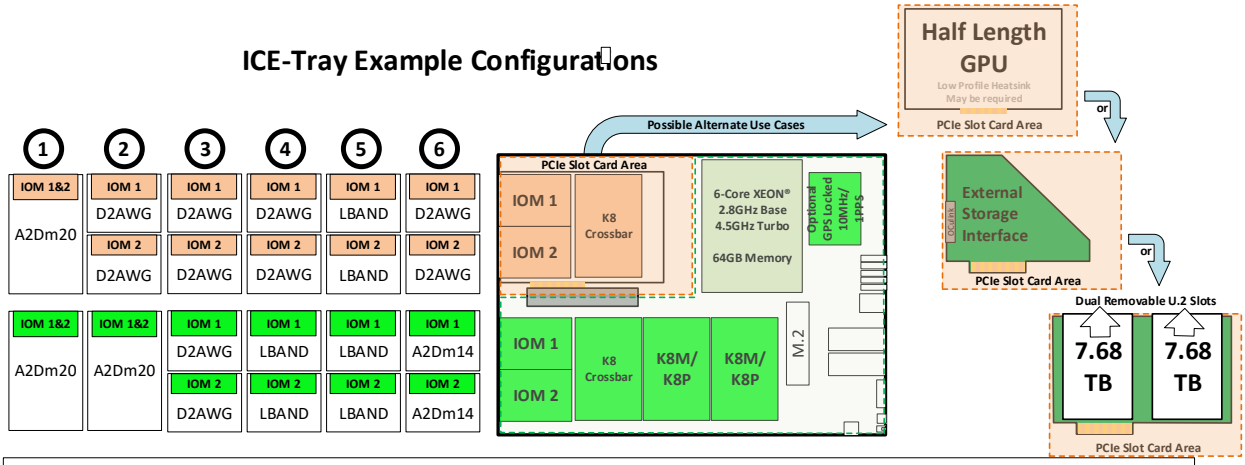

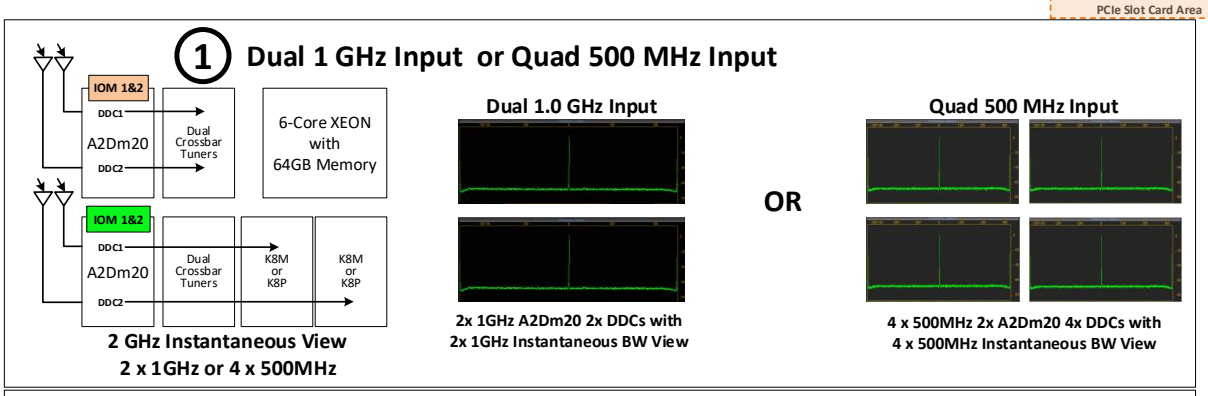

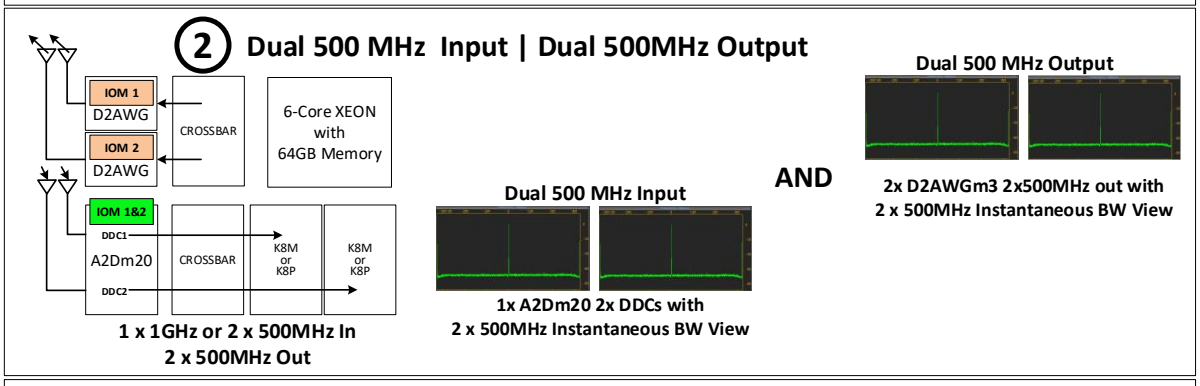

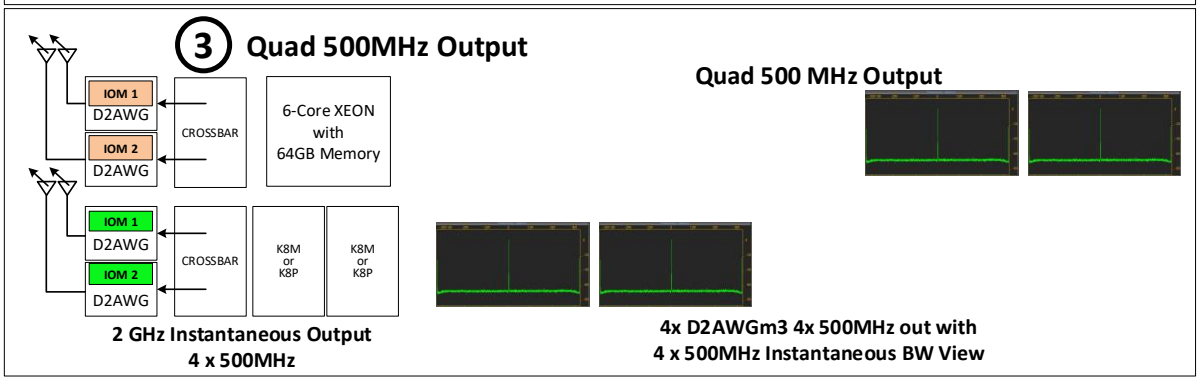

Many other I/O module and processor module configurations are possible.
Contact us to discuss a solution.

© 2021 ICE Enterprises, Inc. ◆ 10302 Eaton Place, Suite 100, Fairfax, VA 22030
Phone 703-934-4879 ◆ Fax 703-591-3048 ◆ Info@ice-online.com ◆ www.ice-online.com

ICE-Tray Example Configurations

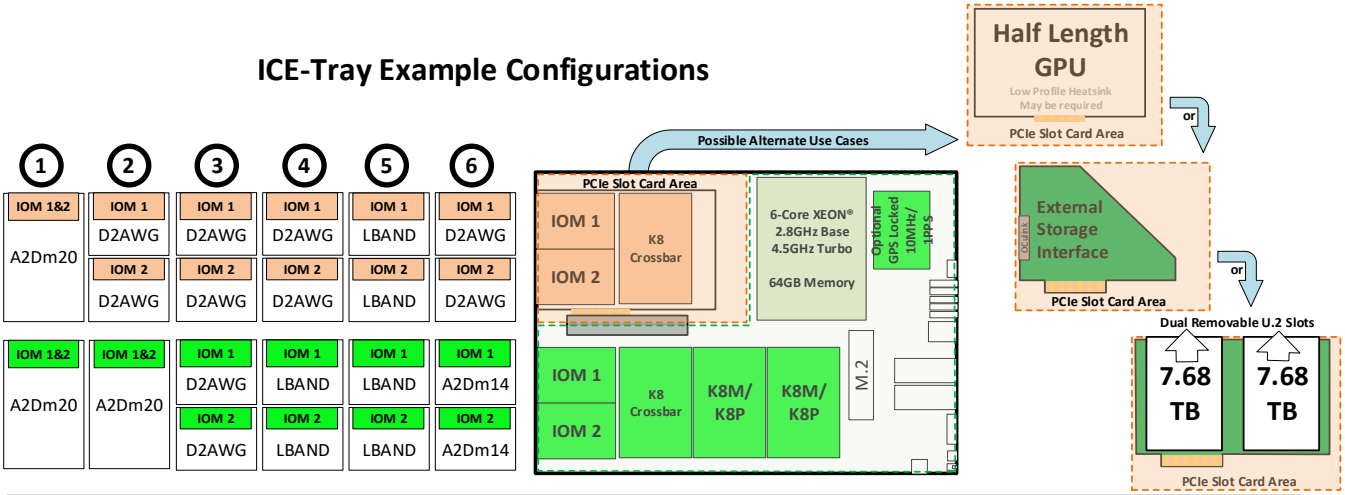

4 Dual L-Band in | Dual L-Band Out

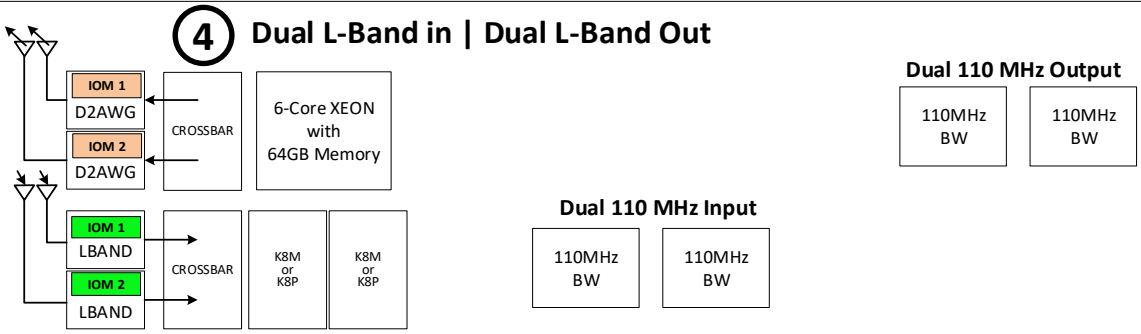

2x LBAND IN 110MHz BW
2x D2AWG LBAND OUT 110MHz BW

5 Quad L-Band In (900-2200MHz)

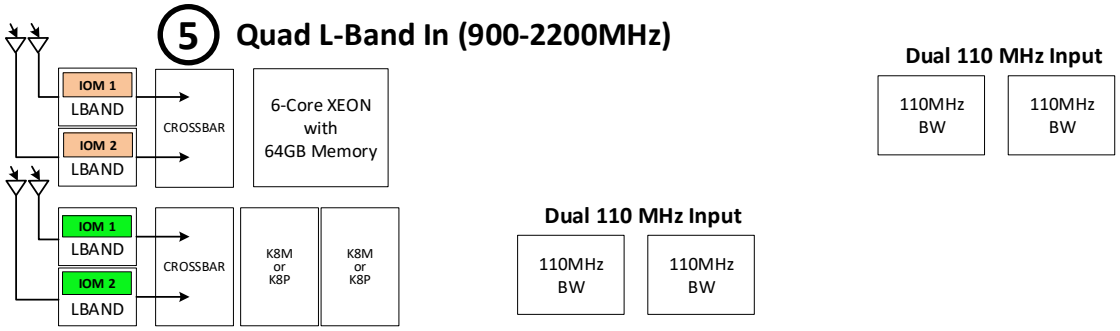

4x LBAND IN 110MHz BW Each

6 Baseband (or Receiver IF)In/Out|70MHz In/Out|140MHz In/Out

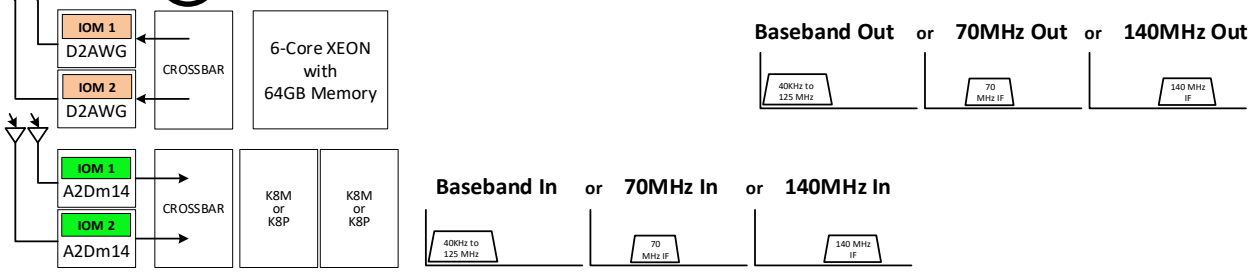

2x A2Dm14 125MHz Baseband/IF Input
2x D2AWG 125MHz Baseband/IF Output

© 2021 ICE Enterprises, Inc. ◆ 10302 Eaton Place, Suite 100, Fairfax, VA 22030
Phone 703-934-4879 ◆ Fax 703-591-3048 ◆ Info@ice-online.com ◆ www.ice-online.com

ICE-Tray Scenario 7 – Complex FPGA Wideband Multi-Signal Generation and Capture

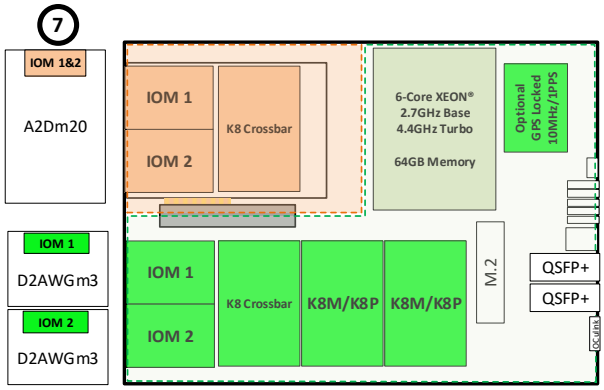

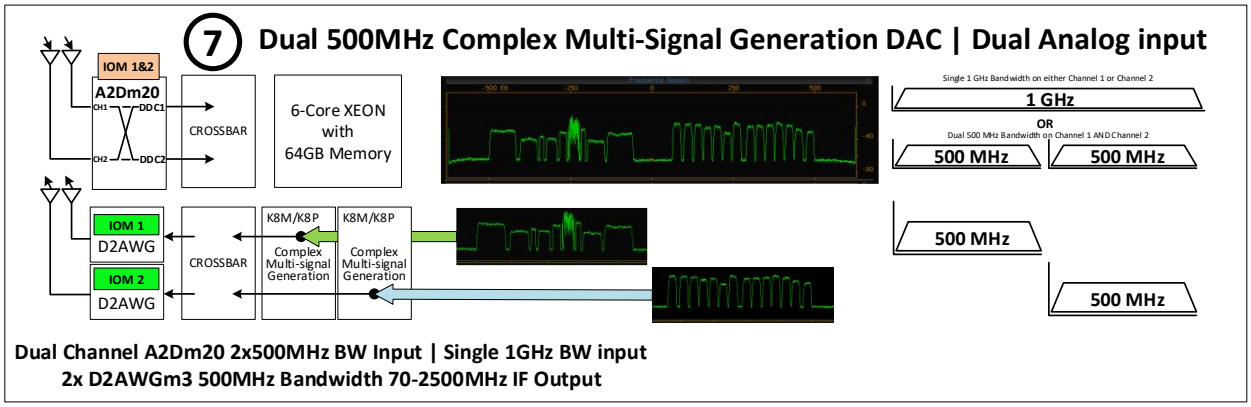

Dual Channel A2Dm20 2x500MHz BW Input | Single 1GHz BW input
2x D2AWGm3 500MHz Bandwidth 70-2500MHz IF Output

Many other I/O module and processor module configurations are possible.
Contact us to discuss a solution.

ICE-Tray Data Paths

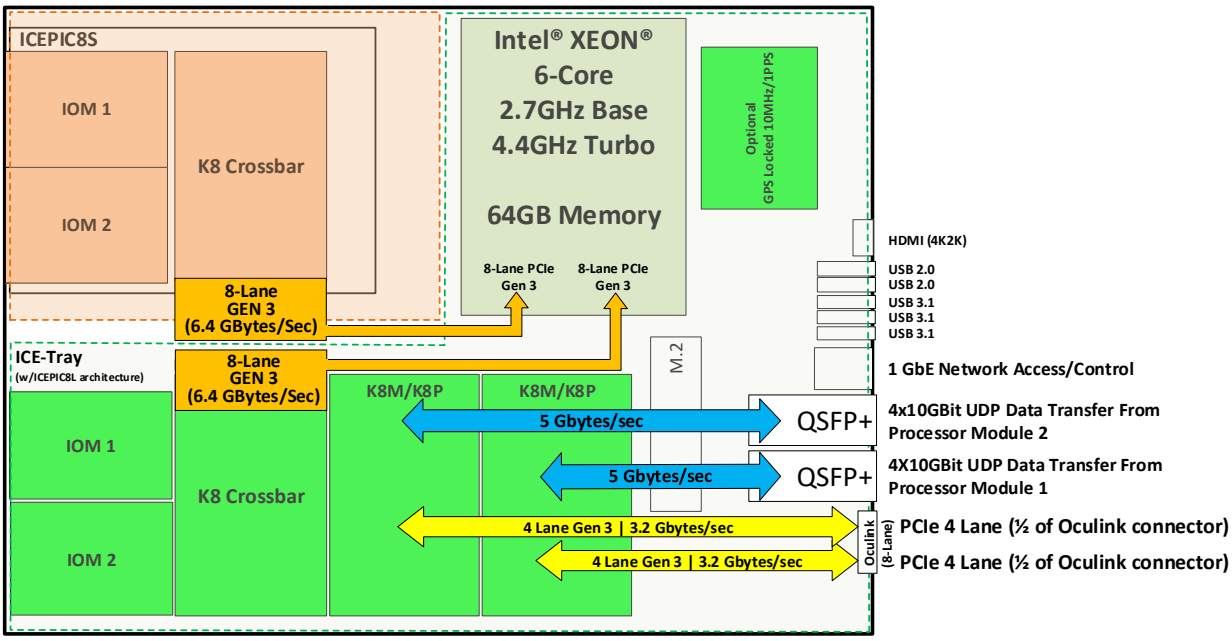

© 2021 ICE Enterprises, Inc. ◆ 10302 Eaton Place, Suite 100, Fairfax, VA 22030
Phone 703-934-4879 ◆ Fax 703-591-3048 ◆ Info@ice-online.com ◆ www.ice-online.com

ICE-Tray – Perspectives – (Shows Removable Fan wall to left)

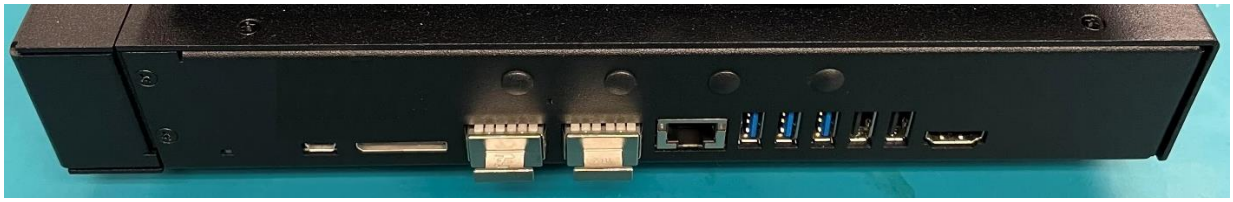

© 2021 ICE Enterprises, Inc. ◆ 10302 Eaton Place, Suite 100, Fairfax, VA 22030
Phone 703-934-4879 ◆ Fax 703-591-3048 ◆ Info@ice-online.com ◆ www.ice-online.com

ICE Enterprises

Entering The 3rd Decade of Innovative Solutions

1997 — Decade 1 — 2007 — Decade 2 — 2017 Proven — 2018 Forward — 2019 Clear — 2020 Thinking

PCIe Cards

ICEPIC PCI Express Card
ICEPIC1 PCI 32bit; ICEPIC2 PCI 32bit; ICEPIC3 PCI 32bit; ICEPIC4 PCI 64bit; ICEPIC5 PCIX 64bit; ICEPIC6 PCIe Gen1; ICEPIC7 PCIe Gen2; ICE-PIC8 / PCIe Gen3

Eight Generations of ICE Hardware

ICE-DPI8 (Deep Packet Inspection)
PCI Express Card / Dual 40G or Quad 10G - Intel® XL710 Interface
ICE-DPI8 / PCIe Gen3

Infrastructure

ICE-PIC8Q (Quad 10G)
PCI Express Card / Dual QSFP+ Quad 10G Full Gate Array Control of I/O
ICE-PIC8Q / PCIe Gen3

Digitizers and Processor Modules

L-Band 900-2200 MHz Tuner
900-2200 MHz 85 MHz BW ICE-LB2Dr2
ICE-LB2Dm3 900-2200 MHz 120 MHz BW

I/O Modules for the The ICE Hardware

Digital to Analog / DAC
160 MS/sec ICE-D2Ar2; 200 MS/sec ICE-D2Ar9; ICE-D2AWGr2 110 MHz BW 0-500MHz IF; ICE-D2RF 50 MHz BW 70-4000MHz RF
ICE-D2AWG-m3 5GSPS DAC / 500 MHz BW 1-2500 MHz Direct RF

L-Band Tuners, IF and Wideband Digitizers

Analog to Digital IF and Baseband digitizer A2D 14 Bit / 125 MHz Bandwidth
105 MS/sec ICE-A2Dr7; 125 MS/sec ICE-A2Dr8; 500 MS/sec ICE-A2Dr10; 250 MS/sec ICE-A2Dr13
250 MS/Sec ICE-A2Dm14

Real-Time Gate Arrays

Analog to Digital w/ 4 Digital Down Convertors (DDC)
A2D 14 Bit / Up to 1.0 GHz Bandwidth (See ICE-A2Dm20 Data Sheet for details)
ICE-A2Dm20 Dual Channel 3.0 GSPS Digitizer Dual 500MHz or Single 1GHz Instantaneous BW

Large Gate Array Processor Modules Xilinx and Altera "Customer Sandbox"
DTDM; DTDMX; V5M; V6M Vertex
Xilinx UltraScale (ICE-K8M); Altera/Intel® Arria 10 (ICE-A8M); Xilinx UltraScale+ (ICE-K8P)

DevICEs

ICEPOD
Ultra Portable High Speed Recorder (HSR) "Shoe Box Size"
ICEPOD6; ICEPOD6.5; ICEPOD8 2600MB/sec Removable Storage

Rugged / Fast

icePAC
Ultra Portable Device / Quad 10 GbE Network Output
ICEPAC 400MB/sec Dual I/O Site

Highly Portable Low SWaP

superPAC
superPAC with a dual processor module capability
superPAC

uPAC
microPAC simply add an FPGA to your existing hardware for real-time processing
uPAC

dataPAC Small Form Factor | Multi-Terabyte | Multi-Gigabyte/sec Storage
Add SFF directly attached Multi-Terabyte Storage to a DevICE | Take data with you!
dataPAC

ICE-Tray A laptop sized enclosure with room for an RF frontend New 6 Core 2.8GHz XEON processing power | 1GHz or Dual 500MHz BW input | 16 CH Tuning on 500MHz input
ICE-Tray

PCIe and Network Appliances

ICE BLOCK (Network Attached ICE-Cards/Modules)
Dual 40 GbE or Quad 10 GbE Network-Attached Appliance
(8TB Record/Playback option available)
Network Attached / 1U Appliance Hosting Dual ICEPIC8 Cards

Fits in a 1U

ICE COOLer (PCIe Remoting w/Fiber ICE-Cards/Modules)
Advanced Connection Over Optically Linked er
PCIe Bus Remoting 1U Chassis Hosting Dual ICEPIC Cards

Rack Mount Solutions

ICE 1G and 10G GigEXD (Set and Forget Data Conversion)
1/10 Gigabit Data Conversion device (Stand Alone and upto 4-Channels in 1U Chassis)
GigEXD 1Gbit; TenGigEXD 10Gbit with 4 Tuners

SynchronICE I/II (GPS 1PPS/10MHz/IRIG Option Available)
Synchronize and Reference multiple devices with 1PPS / 10MHz Ref / IRIGB
SynchronICE; SynchronICE II

Rack and Portable Recorders

ICE Recorder Technology **Up to Dual 5 Gigabytes/sec**
Speed Progression (Megabytes/sec) 20 80 320 1250 1400 2800

Turn-key

Analog Recorders Call for a Solution
ICECAP20; ICECAP80; ICECAP320; ICECAP1250; ICECAP 1400; ICECAP 1600 Quad 400MB/s
ICECAP10000 (5GBytes/sec x2)
Analog A2Dm20 - ICECAP 10000

Rack Mount Optical/Packet Recorders
Tandem OC192 / 10G ICEPIC8 | SONETR7 | UDP10Gr3

High Speed Recorders for Packets or Pre-D

Portable Small Analog Recorders
LBAND In / LBAND Out Applications
IF-in: IF Out up to Dual 1000 MB/S

Portable Small 12 Volt DC Optical Recorders
ICEPOD8 HSR SONET OC192 10GICE-SONETr7

Portable ICE Briefcase Recorders
"Server-in-a-Briefcase"
Original QT360 Briefcase 2003; ICE Briefcase XEON® Series 48GB RAM Hosting Dual ICEPIC6 Cards; ICE Briefcase Intel® 8th Generation XEON V4 Series - 128GB RAM Hosting Dual ICEPIC8 Cards/Modules

Custom Packet Recorders
(4 Channel / 400 Megabytes/sec - 2U)
ICE-CSC-M2012 Quad 400MB/s
ICE-CSC-M2012R-2U Quad 500MB/s RAID5

ICE-GNSS-450 | *flightPAC* Global Navigational Satellite System(GNSS) Recorder
Full Simultaneous L1/L2/L5 (GPS/GLO/GAL/BDS All Frequencies/All GNSS MEO Satellites)
flightPAC30 30TeraByte data pack for 3.5 Hours of full spectrum recording
ICE-GNSS-450; *flightPAC30*

DodD ICE 20200430

1997 — Decade 1 — 2007 — Decade 2 — 2017 Proven — 2018 Forward — 2019 Clear — 2020 Thinking

Copyright © 2020 All rights reserved| Trademarks are respective to owners | Information is Subject to Change

ICE Enterprises, Inc. ◆ 10302 Eaton Place ◆ Fairfax ◆ VA 22030 703-934-4879 info@ice-online.com ◆ www.ice-online.com